800 W PFC Evaluationboard

High power density 800 W 130 kHz platinum server design with analog & digital control

EVAL_800W_PFC_C7_V2

SP001647120
SA001647124

Garcia Rafael (IFAT PMM ACDC AE)
Zechner Florian (IFAT PMM ACDC AE)

Table of contents

1 General description

2 Test results

3 Design concept

Copyright © Infineon Technologies AG 2017. All rights reserved.

Table of contents

1 General description

2 Test results

3 Design concept

Copyright © Infineon Technologies AG 2017. All rights reserved.

General

Description:

› The **"EVAL_800W_PFC_C7_V2"** - evaluation board shows how to design an high power density 800 W 130 kHz platinum server supply with Power Factor Correction (PFC) Boost Converter working in Continuous Conduction Mode (CCM). On this purpose the latest CoolMOS™ technology IPP60R180C7 600 V power MOSFET, IDH06G65C5 650 V thinQ!™ SiC Schottky Diode Generation 5, ICE3PCS01G PFC Controller , low-side Non Isolated Gate Driver 2EDN7524F EiceDRIVER™, XMC 1400 Microcontroller and Quasi Resonant CoolSET™ ICE2QR2280Z have been applied.

Summary of features:

› Output voltage: 380 V_{DC}

› Output current: 2.1 A

› Efficiency: >96% @ 20% load, V_{in} = 230 V_{DC}

› Switching Frequency: 130 kHz

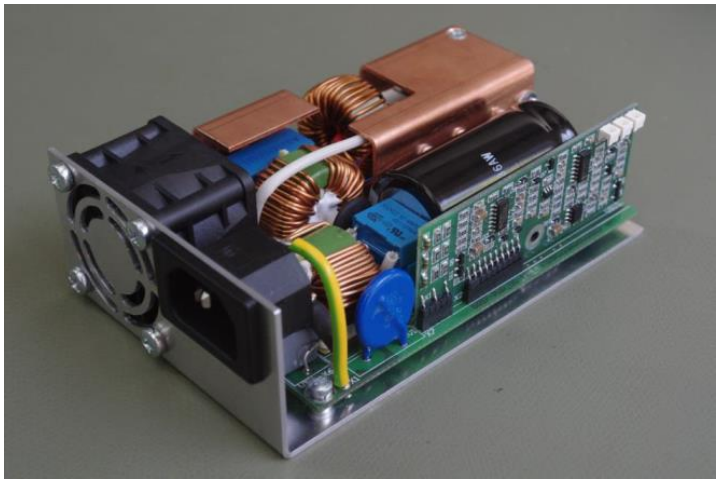

The following variant is available:

› 800 W 130 kHz PFC version with CoolMOS™ C7, IPP60R180C7, **EVAL_800W_PFC_C7_V2**

Copyright © Infineon Technologies AG 2017. All rights reserved.

Infineon high power density 800 W 130 kHz platinum server design



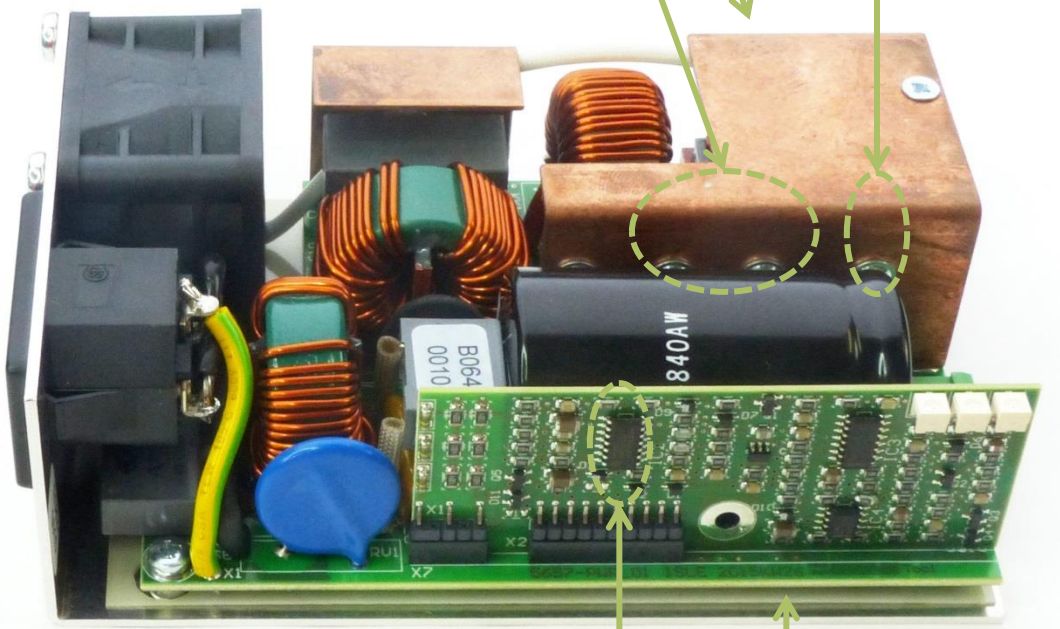

PWM Controller
CoolSET™ ICE2QR2280Z

Silicon Carbide Diode
5th G. thinQ!™ IDH06G65C5

Power MOSFETs
CoolMOS™ IPP60R180C7

Microcontroller XMC 1400
DIGITAL
XMC1402-Q040X0128 AA

PFC CCM Controller
ANALOG
ICE3PCS01G

EiceDRIVER™
2EDN7524F

Copyright © Infineon Technologies AG 2017. All rights reserved.

Main power board schematic

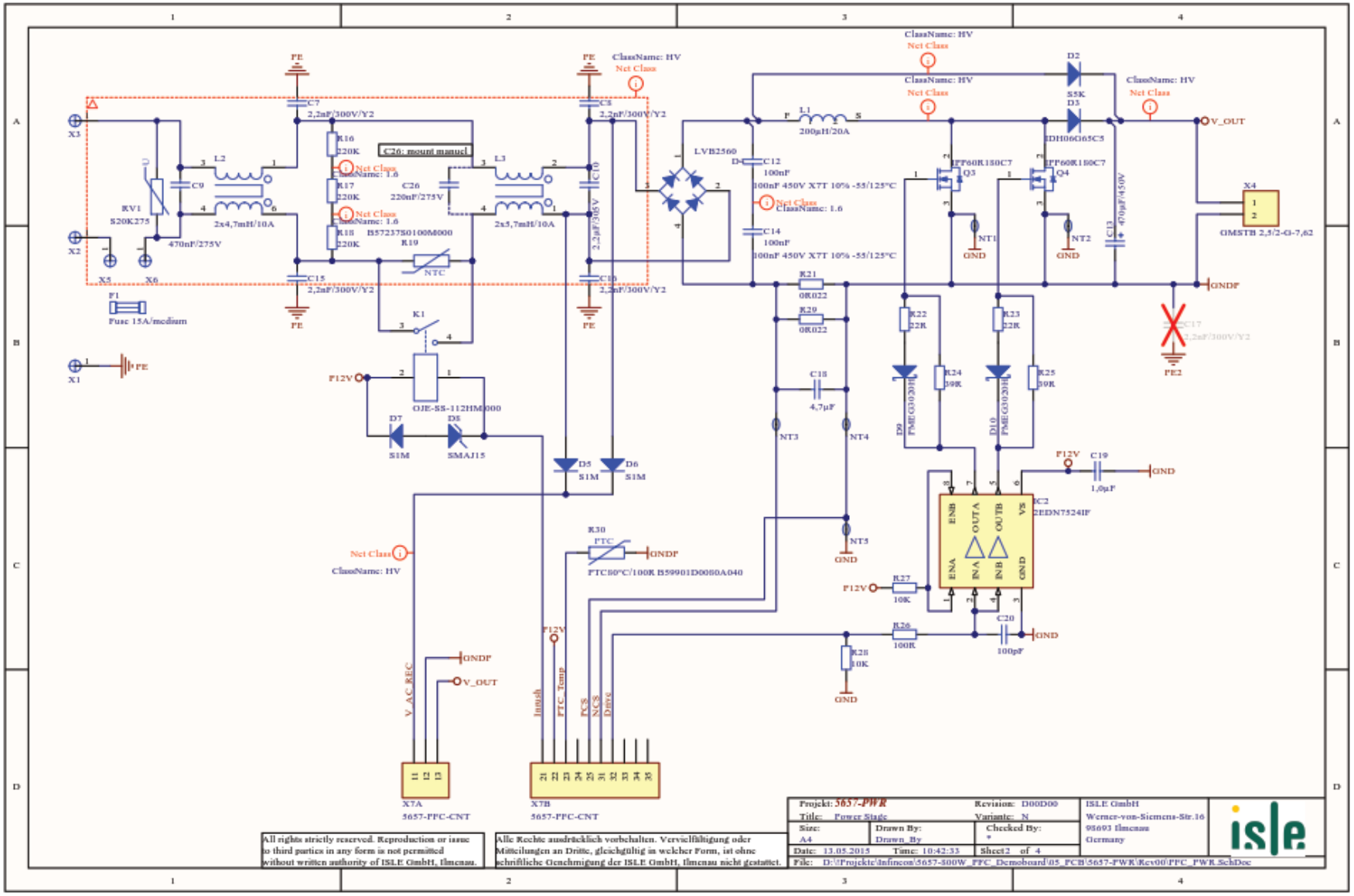

Copyright © Infineon Technologies AG 2017. All rights reserved.

Bias board schematic

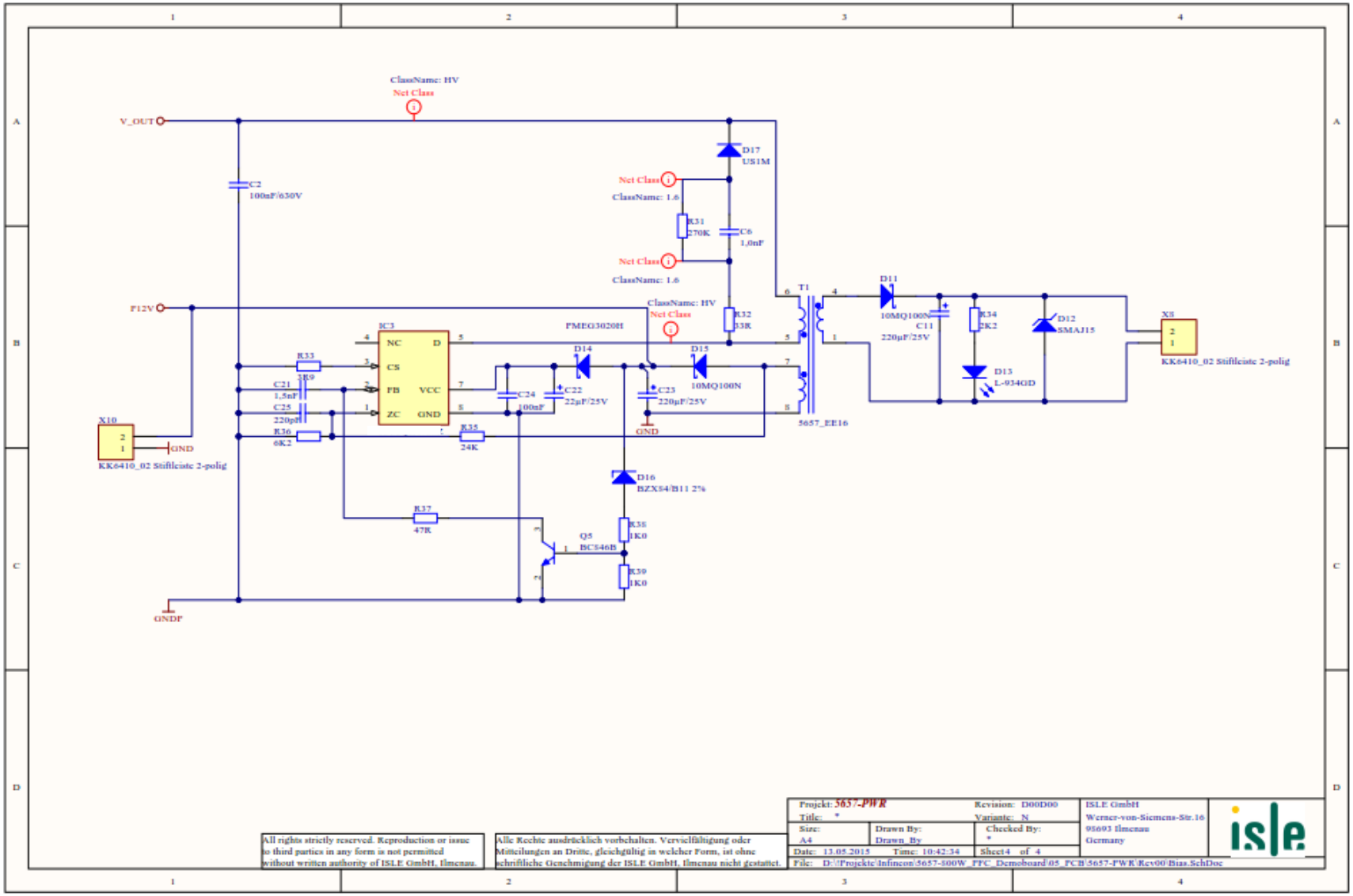

Copyright © Infineon Technologies AG 2017. All rights reserved.

Digital control board schematic

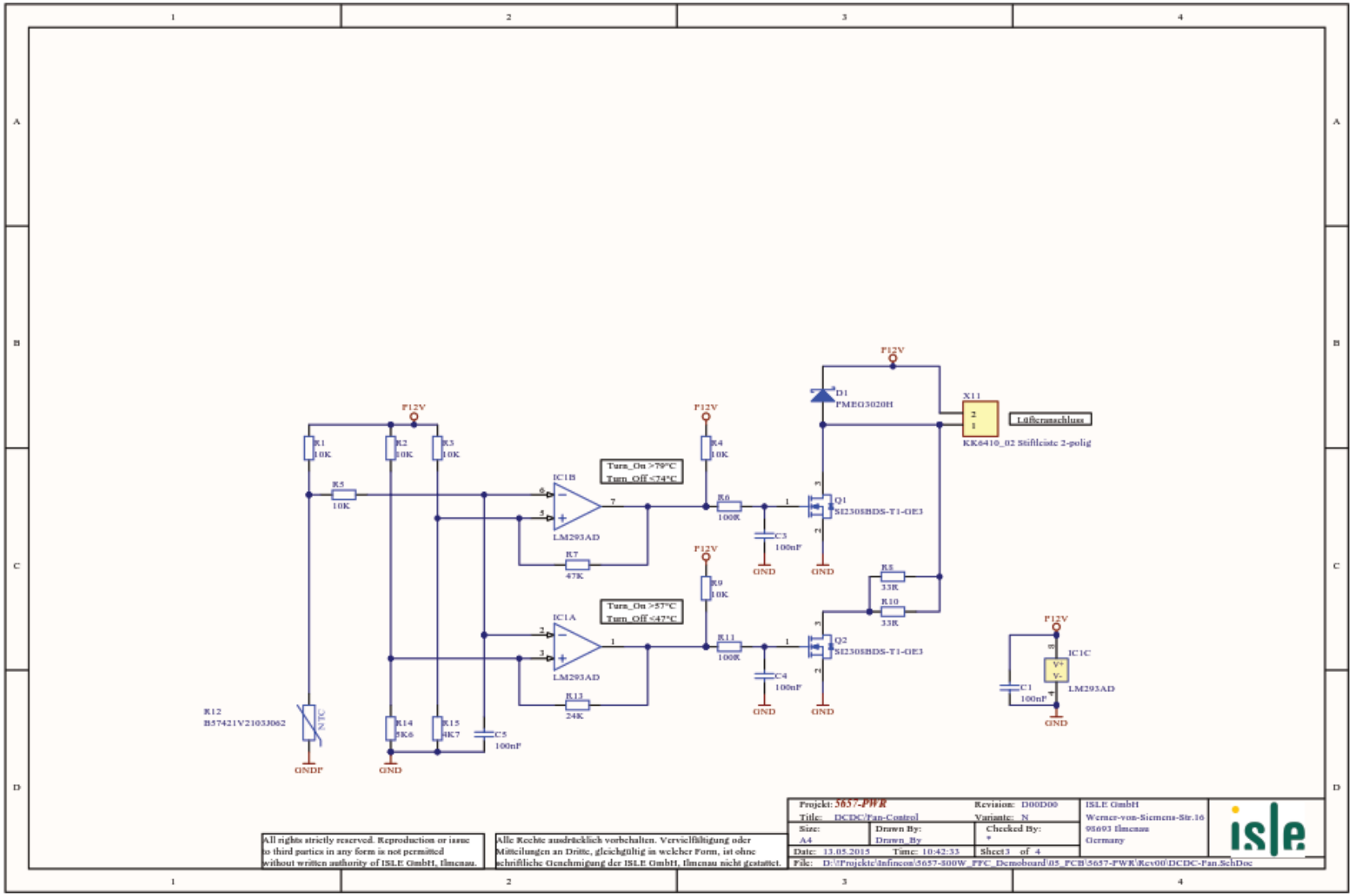

Copyright © Infineon Technologies AG 2017. All rights reserved.

PFC control schematic

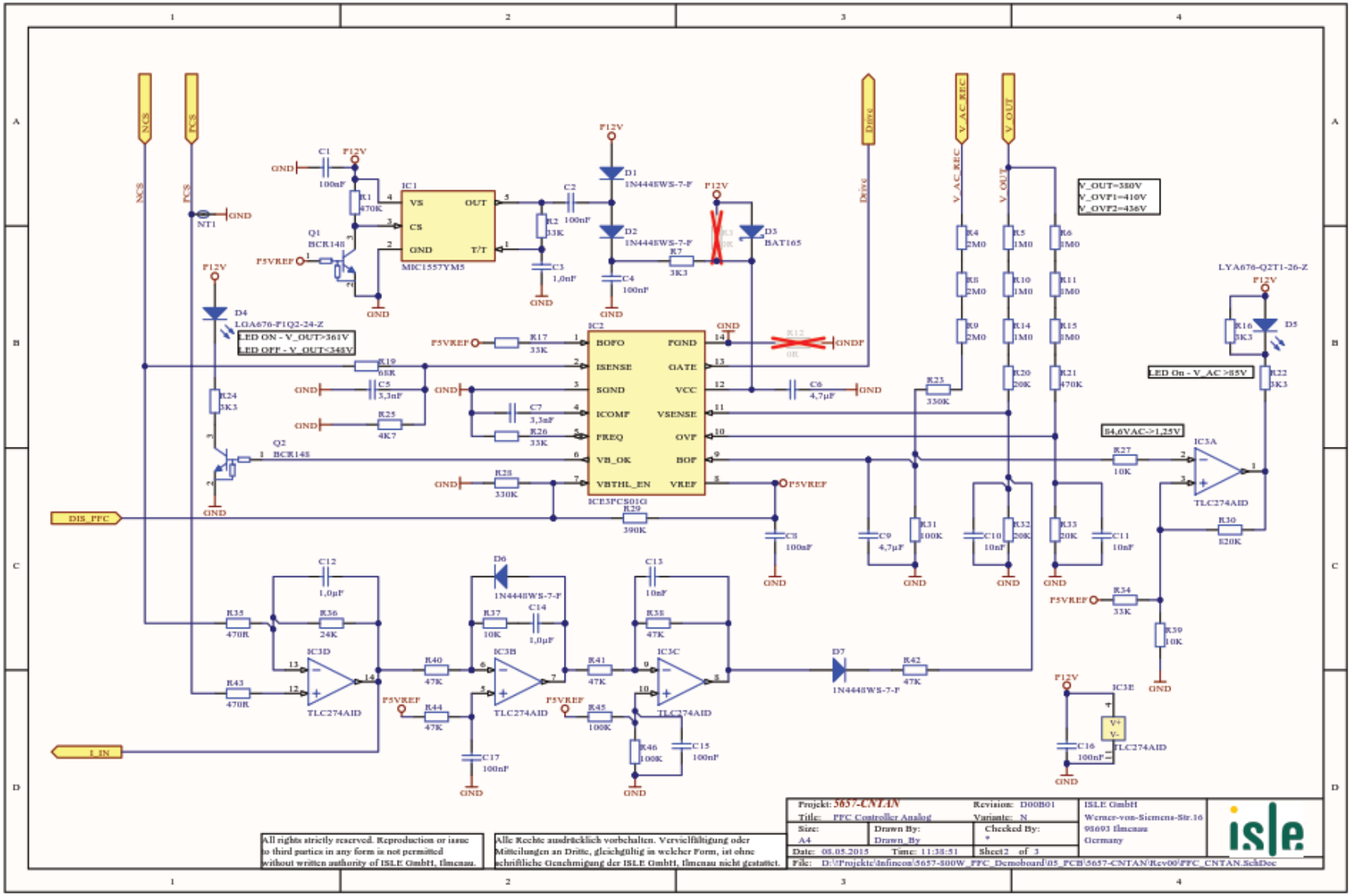

Copyright © Infineon Technologies AG 2017. All rights reserved.

Temperature monitoring and inrush relay control schematic

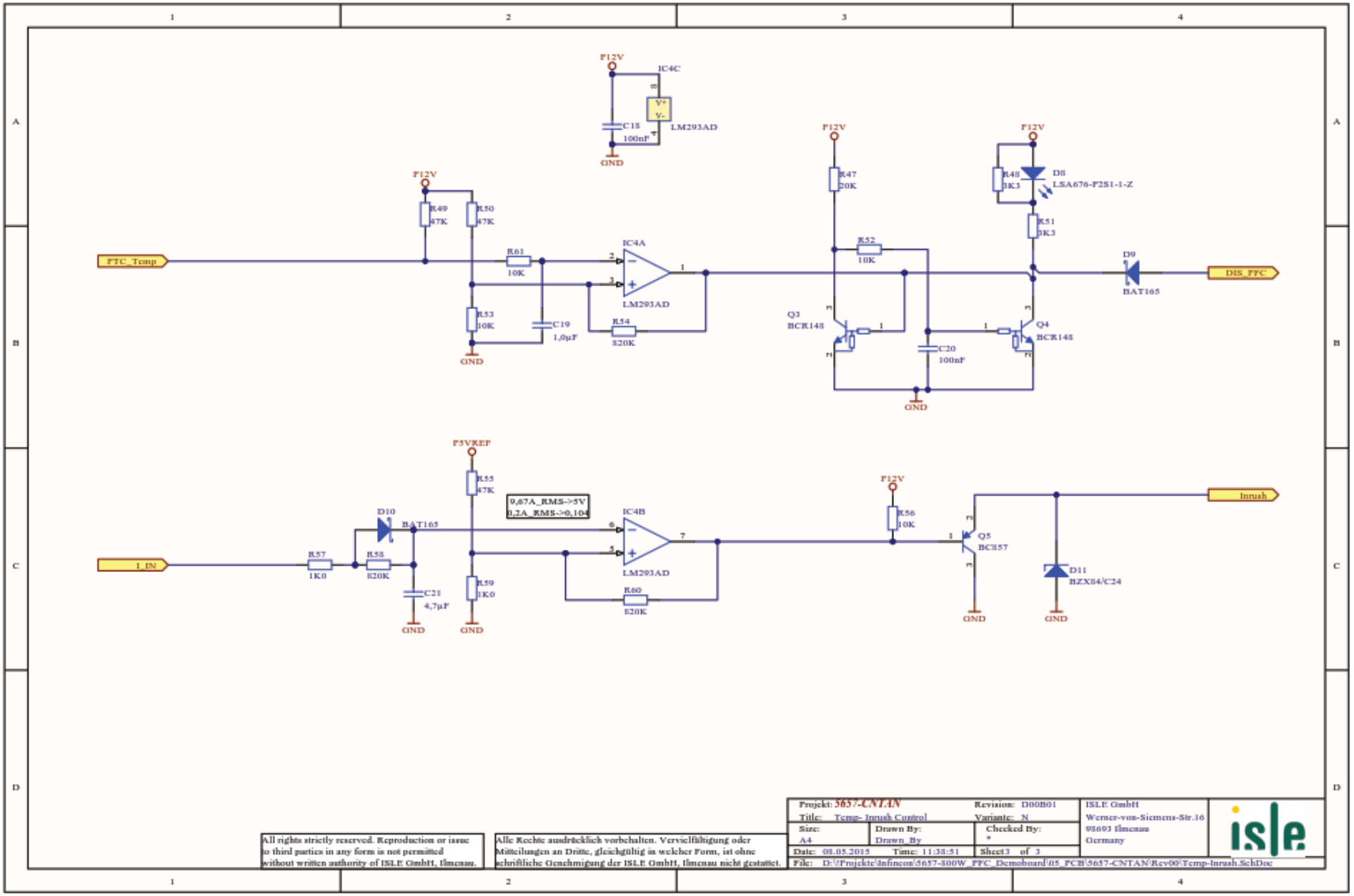

Copyright © Infineon Technologies AG 2017. All rights reserved.

PCB layout

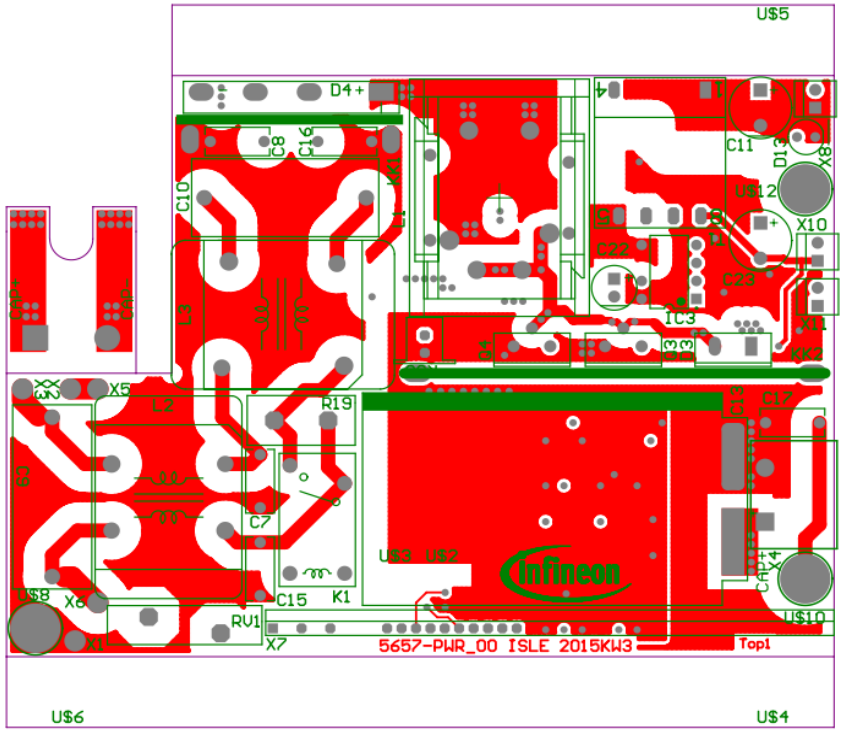

Top layer

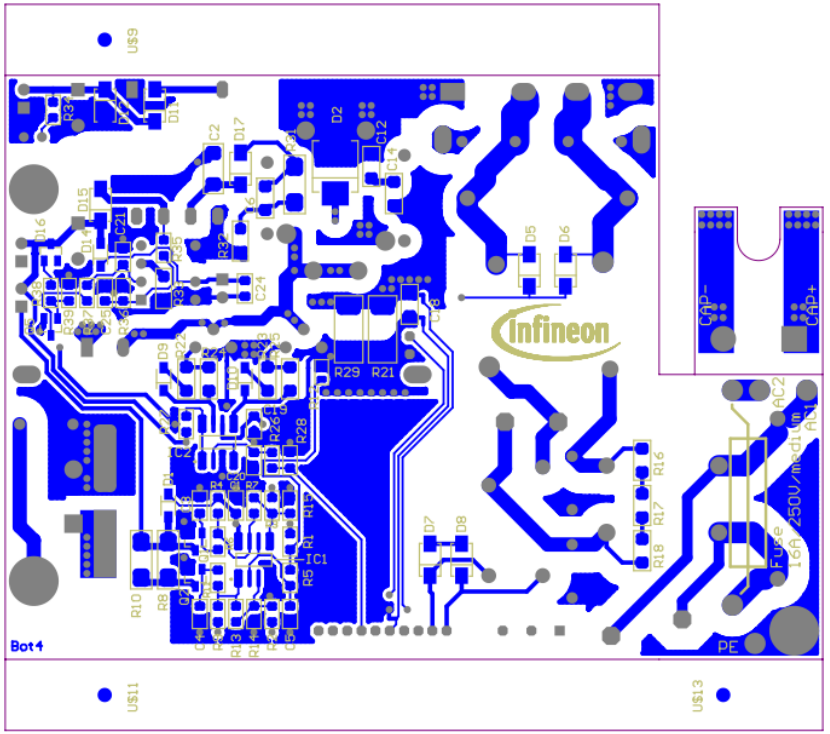

Bottom layer

Copyright © Infineon Technologies AG 2017. All rights reserved.

Table of contents

1 General description

2 Test results

3 Design concept

Copyright © Infineon Technologies AG 2017. All rights reserved.

Requirements

Parameter	Value
• **Input requirements**	
Input voltage range, V_{in_range}	90 V_{AC} – 265 V_{AC}
Nominal input voltage, V_{in}	230 V_{AC}
AC line frequency range, f_{AC}	47 – 64 Hz
Max peak input current, I_{in_max}	10 A_{RMS} @ V_{in} = 90 V_{AC} , P_{out_max} = 800 W , Max load
Turn on input voltage, V_{in_on}	80 V_{AC} – 87 V_{AC}, Ramping up
Turn off input voltage, V_{in_off}	75 V_{AC} – 85 V_{AC}, Ramping down
Power Factor Correction (PFC)	Shall be greater than 0.95 from 20% rated load and above
Hold up time	10 ms after last AC zero point @ P_{out_max} = 800 W, V_{out_min} = 320 V_{DC}
• **Output features**	
Nominal output voltage, V_{out}	380 V_{DC}
Maximum output power, P_{out}	800 W
Maximum output current, I_{out_max}	2,1 A
Output voltage ripple	Max 20 V_{pk-pk} @ V_{out} , I_{out}
Output OV threshold maximum	450 V_{DC}
Output OV threshold minimum	420 V_{DC}

Copyright © Infineon Technologies AG 2017. All rights reserved.

Efficiency

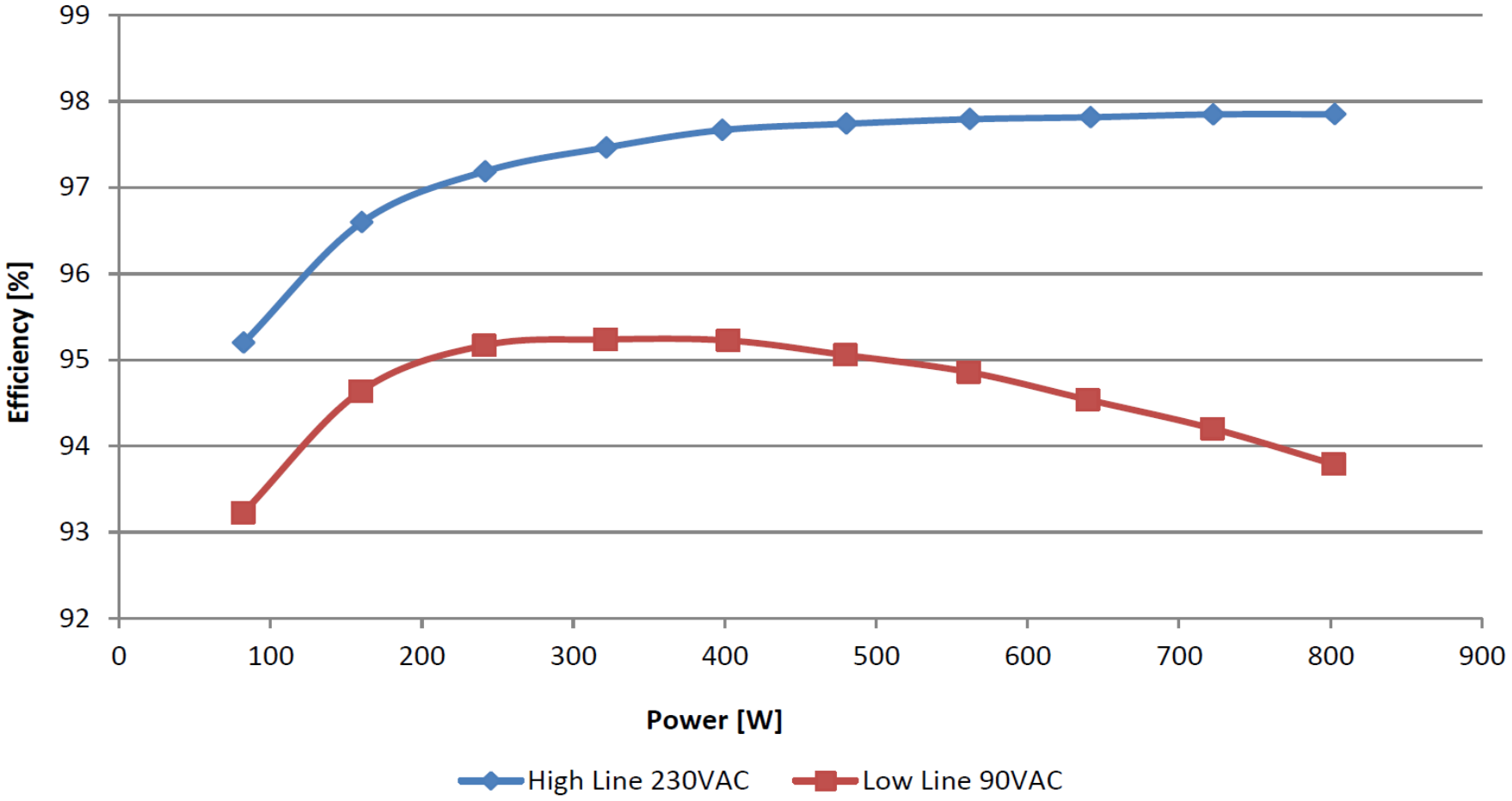

High Line and Low Line efficiency

2x IPP60R180C7 @ f_s = 130 kHz, $R_{gate(on)}$ = 39 Ω, $R_{gate(off)}$ = 14 Ω

*Fan powered externally with +12V and running at full speed

Copyright © Infineon Technologies AG 2017. All rights reserved.

Table of contents

1 General description

2 Test results

3 Design concept

Copyright © Infineon Technologies AG 2017. All rights reserved.

Power Factor Correction (PFC)

Power Factor Correction (PFC) shapes the input current of the power supply to be in synchronization with the mains voltage, in order to maximize the real power drawn from the mains. In a perfect PFC circuit, the input current follows the input voltage as a pure resistor, without any input current harmonics.
This document is to demonstrate the design and practical results of an 800 W 130 kHz platinum server PFC demo board based on Infineon Technologies devices in terms power semiconductors, non-isolated Gate Drivers, analog and digital controllers for the PFC converter as well as Flyback controller for the auxiliary supply.

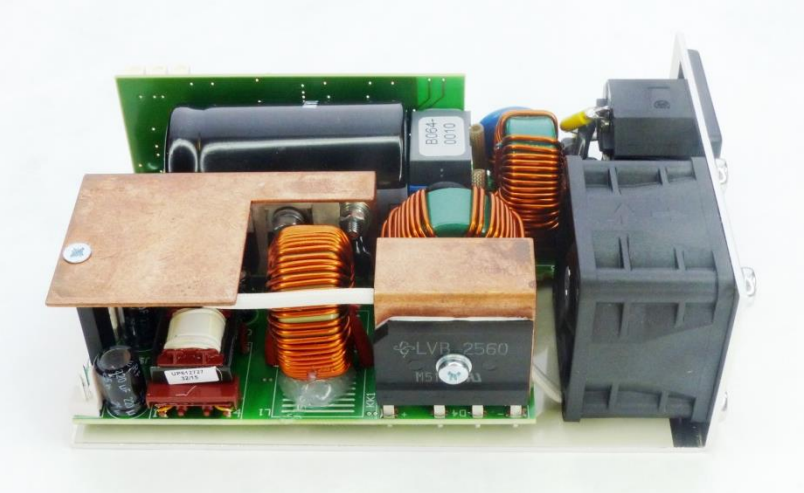



Copyright © Infineon Technologies AG 2017. All rights reserved.

Topology of the boost converter

Although active PFC can be achieved by several topologies, the boost converter is the most popular topology used in Server PFC applications, for the following reasons:

- The line voltage varies from zero to some peak value typically 375 V; hence a step up converter is needed to output a DC bus voltage of 380 V or more. For that reason the buck converter is eliminated, and the buck-boost converter has high switch voltage stress ($V_{in}+V_o$), therefore it is also not the popular one.
- The boost converter has the filter inductor on the input side, which provides a smooth continuous input current waveform as opposed to the discontinuous input current of the buck or buck-boost topology. The continuous input current is much easier to filter, which is a major advantage of this design because any additional filtering needed on the converter input will increase the cost and reduces the power factor due to capacitive loading of the line.

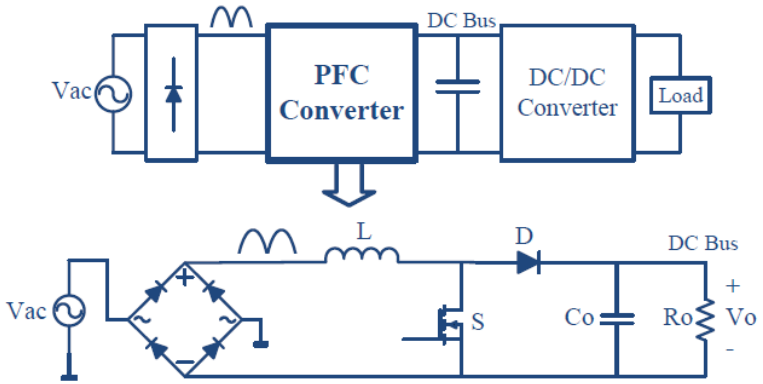

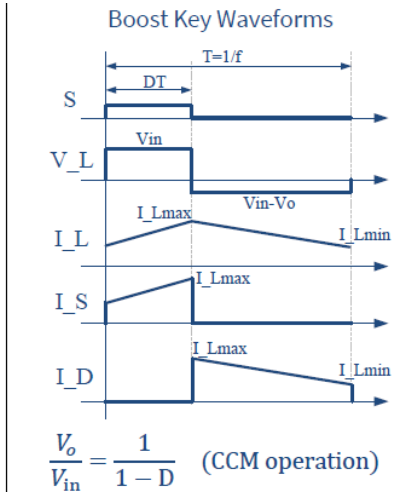

Structure and key waveforms of a boost converter

Copyright © Infineon Technologies AG 2017. All rights reserved.

PFC modes of operation

The boost converter can operate in three modes: Continuous Conduction Mode (CCM), Discontinuous Conduction Mode (DCM), and Critical Conduction Mode (CrCM). Figure 2 shows modeled waveforms to illustrate the inductor and input currents in the three operating modes, for the same exact voltage and power conditions. By comparing DCM among the others, DCM operation seems simpler than CrCM, since it may operate in constant frequency operation; however DCM has the disadvantage that it has the highest peak current compared to CrCM and also to CCM, without any performance advantage compared to CrCM. For that reason, CrCM is a more common practice design than DCM, therefore, this document will exclude the DCM design.

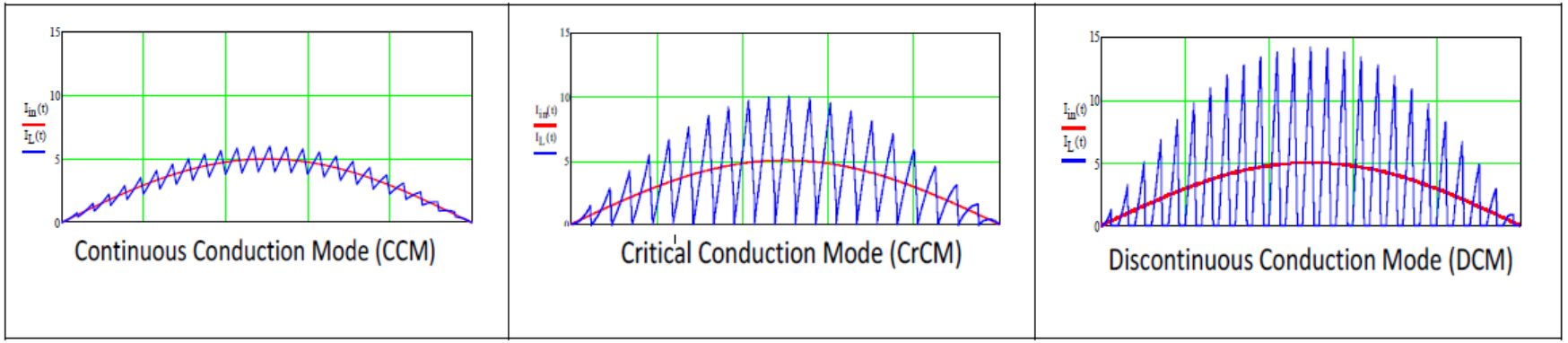

PFC inductor and input line current waveforms in the three different operating modes

Copyright © Infineon Technologies AG 2017. All rights reserved.

EMI filter

The EMI filter implemented is as a two-stage filter, which provides sufficient attenuation for both Differential Mode (DM) and Common Mode (CM) noise.

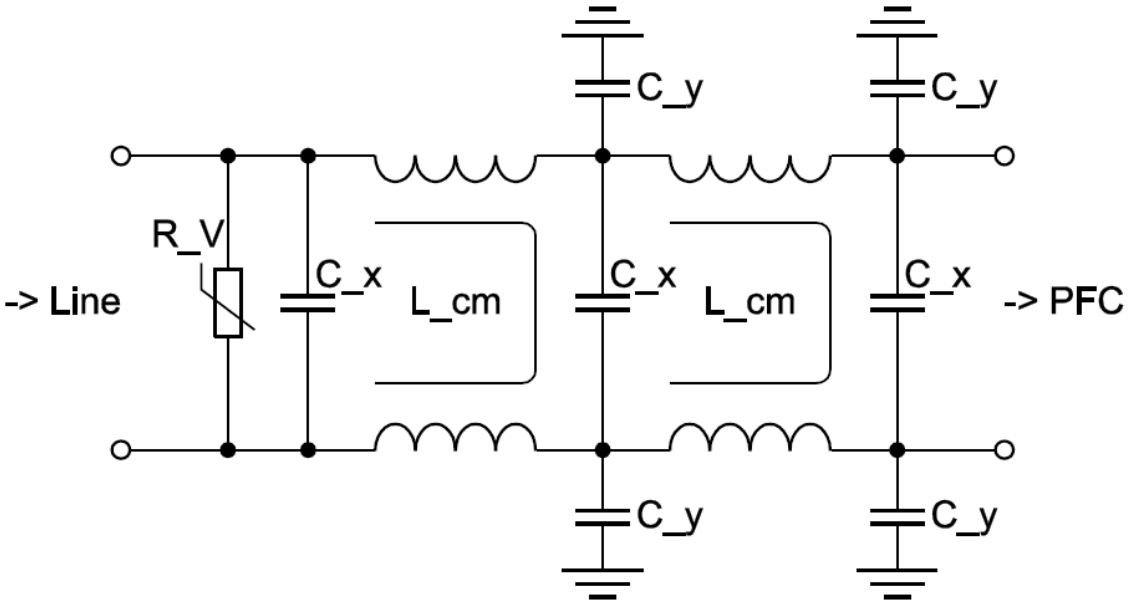

The two high current common mode chokes L_cm are based on high permeability toroid ferrite cores.
1. 2 x 26 Turns/ 2 x 4,76 mH
2. 2 x 28 Turns/ 2 x 5,7 mH

The relatively high number of turns causes a considerable amount of stray inductance, which ensures sufficient DM attenuation.

Copyright © Infineon Technologies AG 2017. All rights reserved.

Rectifier bridge

The rectifier bridge is designed for the worst case: maximum output power and minimum input voltage. To calculate the input current, an efficiency of 94% (at V_{in} = 90 V) is applied.

Maximum rms value of the input current:

$$I_{INrms} = \frac{P_{OUTmax}}{\eta V_{INrms}} = \frac{800W}{0{,}94 \cdot 90V} = 9{,}46A$$

Maximum rms value of the diode current:

$$I_{Drms} = \frac{I_{INrms}}{2} = 4{,}73A$$

Maximum average value of the diode current:

$$I_{Davg} = \frac{\sqrt{2} I_{INrms}}{\pi} = 4{,}26A$$

Conduction losses of a rectifier diode:

$$P_D = I_{Davg} \cdot V_D + (I_{Drms})^2 \cdot r_D = 4{,}26A \cdot 0{,}5V + (4{,}73A)^2 \cdot 0{,}016\Omega = 2{,}49W$$

Total losses of the rectifier:

$$P_{REC} = 4P_D = 4 \cdot 2{,}49W = 9{,}96W$$

Copyright © Infineon Technologies AG 2017. All rights reserved.

PFC choke

The PFC choke design is based on a toroid high performance powder core.
Toroid chokes allow well balanced and minimized core and winding losses, having a homogeneous heat distribution w/o hot spots and a large surface area. Hence they are predestined for systems which are targeting highest power density with forced air convection. Thereby very small choke sizes are feasible.



The core material was chosen to be a 60µ Chang Sung Corporation's (CSC) HIGH FLUX, which has an excellent DC bias and good core loss behavior.

The outer diameter of the magnetic powder toroidal core is 27 mm.

The winding was implemented using enameled copper wire AWG 16 (1,25 mm diameter) with 60 turns.

Copyright © Infineon Technologies AG 2017. All rights reserved.

Support slides
800 W 130 kHz platinum server design

Evaluation board page

- Technical description
- Datasheets
- Parameters
- Related material
- Videos

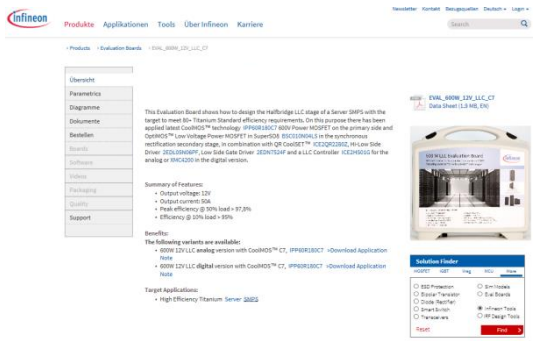

- EVAL_800W_PFC_C7_V2

Product family pages

- Product brief
- Application notes
- Selection guides
- Datasheets and portfolio
- Videos
- Simulation models



- IPP60R180C7
- IDH06G65C5
- ICE3PCS01G
- 2EDN7524F
- XMC 1400
- ICE2QR2280Z

Copyright © Infineon Technologies AG 2017. All rights reserved.



Part of your life. Part of tomorrow.

Infineon